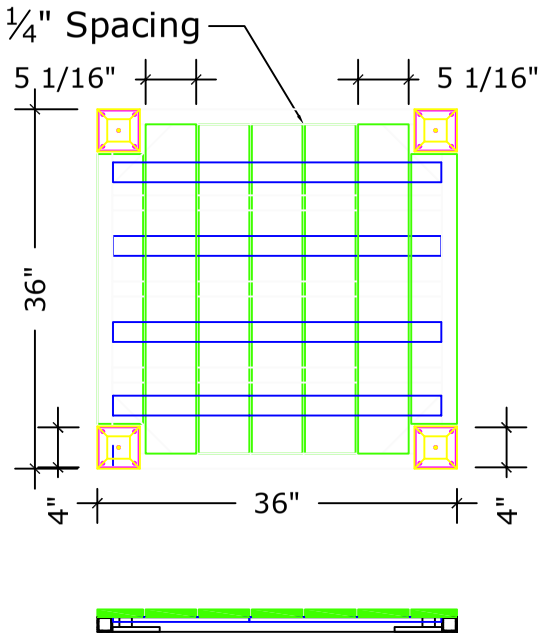

Typical Single Frame with Decking

N.T.S.

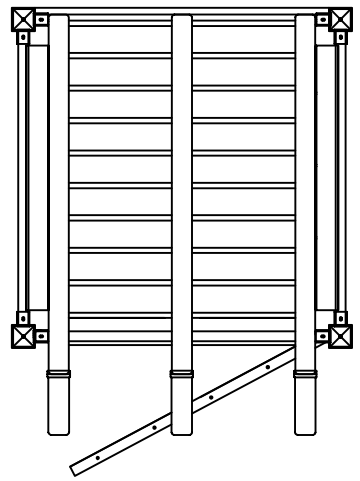

Single Model Top View

N.T.S.

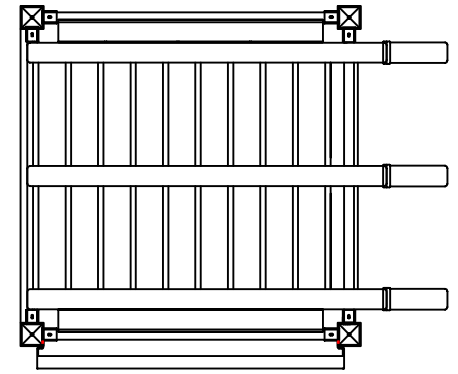

Single Model Top Left Side View

N.T.S.

View of Layout

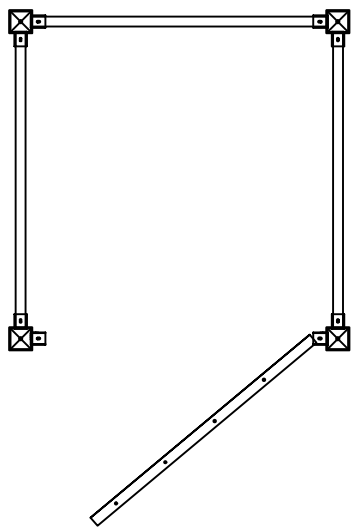

Model STP-2 (36")

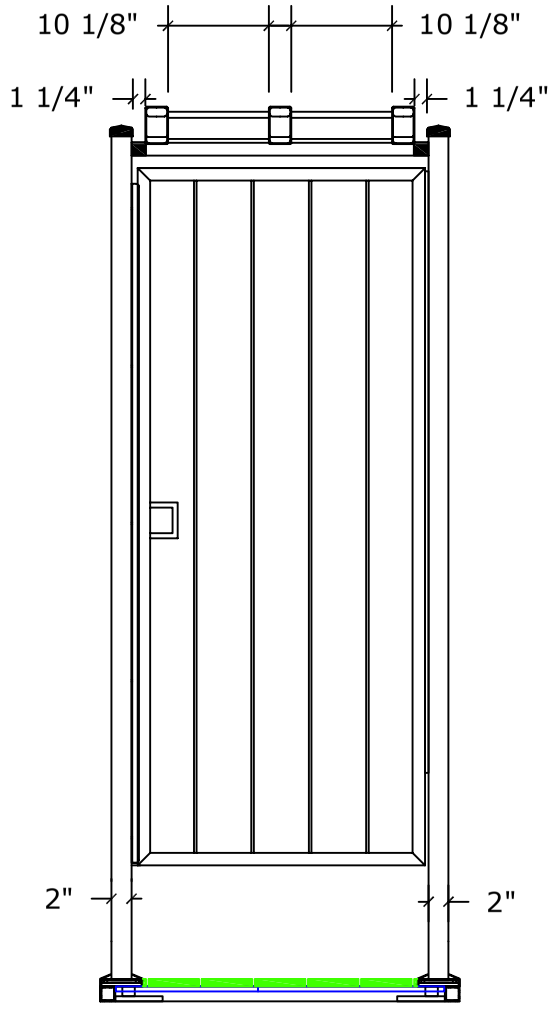

Single Model Elevation

N.T.S.

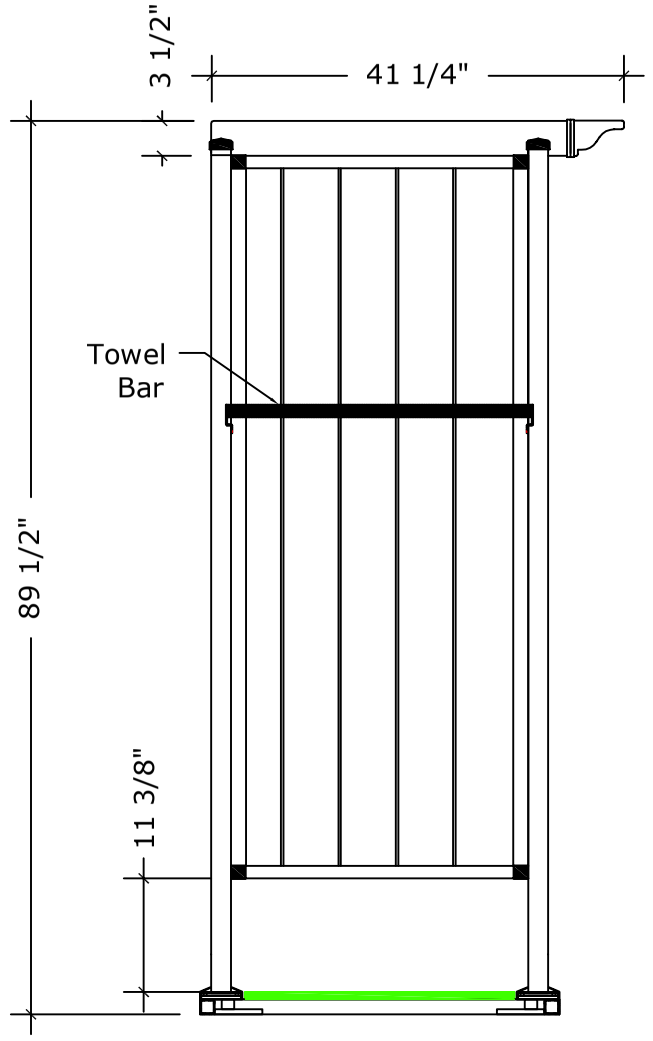

Single Model Side Elevation

N.T.S.

"The Original"
ToddPod™
Shower & Toilet Systems

SHEET 2 OF 2

mailto:office@toddpod.com
phone:775-TODD-POD

DATE: 2/15/17

36" Model - STP-2